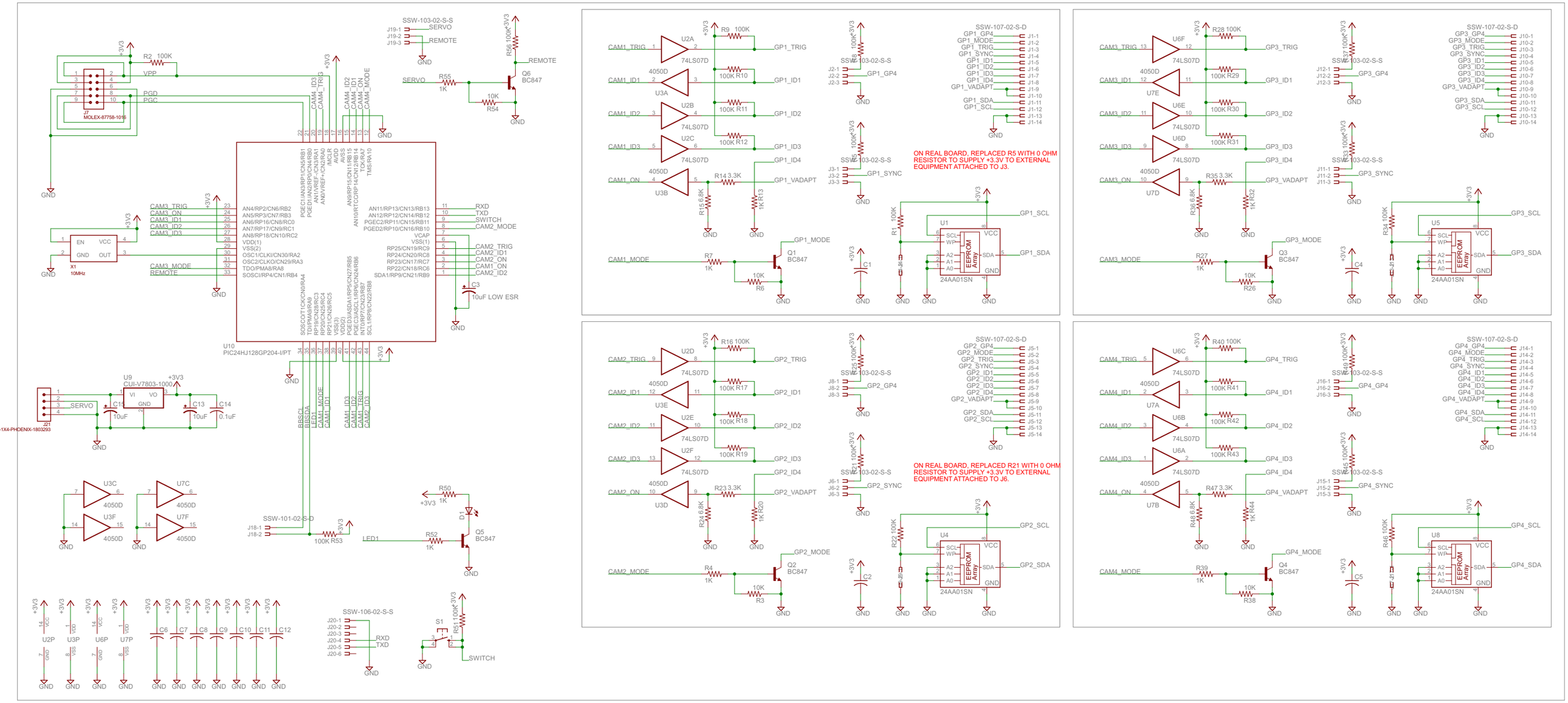
U10
PIC24HJ128GP204-I/PT
J7
MOLEX-87758-1016
X1
10MHz
U9
CUI-V7803-1000
G1
CON-3.81MM-1X4-PHOENIX-1803293
SSW-103-02-S-S
SSW-107-02-S-D
SSW-101-02-S-D
SSW-106-02-S-S
ON REAL BOARD, REPLACED R5 WITH 0 OHM RESISTOR TO SUPPLY +3.3V TO EXTERNAL EQUIPMENT ATTACHED TO J3.
ON REAL BOARD, REPLACED R21 WITH 0 OHM RESISTOR TO SUPPLY +3.3V TO EXTERNAL EQUIPMENT ATTACHED TO J6.
24AA01SN
EEPROM Array
10uF LOW ESR